Panasonic

Panasonic Semiconductor Singapore
A Division of Panasonic Semiconductor Asia Pte Ltd
Company Registration No. 197803125E
22, Ang Mo Kio Industrial Park 2, Singapore 569506.
Tel: (65)64818811 Fax: (65)64816486

APPROVED
EXTERNAL ISSUE

DOCUMENT COVER PAGE

Note: This cover page establishes the Doc No., Title and current status of the attached document.

Doc No.	SDSC-PSE-AN7522	Issue Level	Rev	Eff Date
		1	4	27-FEB-06
Doc Title	Product Specifications for AN7522	Total no. of pages (excluding this page)		9

Revision History

Issue	Rev	Eff Date	S/N	Page	Change Details	Remarks
1	1	04-NOV-04	1	-	Added this cover page.	
			2	7A	Added this page for leadfree specification.	
	2	15-DEC-04	1	7	Removed this page.	
			2	7A	Amended Outer Lead Surface Process & Chip Mounting Method.	
	3	19-JAN-05	1	6	Removed physical product marking indication.	
	4	27-FEB-06	1	7A	Amended outer lead surface process.	

APPROVED
EXTERNAL ISSUE

Structure	Silicon Monolithic Bipolar IC
Appearance	FP12S Plastic Package (Power Type with Fin)
Application	Low Frequency Amplifier
Function	BTL 3.0W x 2ch Power Amplifier with Standby Function and Volume Function

A Absolute Maximum Ratings

No.	Item	Symbol	Ratings	Unit	Note
1	Storage Temperature	Tstg	-55 ~ +150	°C	1
2	Operating Ambient Temperature	Topr	-25 ~ +70	°C	1
3	Operating Ambient Pressure	Popr	$1.013 \times 10^5 \pm 0.61 \times 10^5$ (1.0± 0.6)	Pa (atm)	
4	Operating Constant Acceleration	Gopr	9 810 (1 000)	m/s^2 (G)	
5	Operating Shock	Sopr	4 900 (500)	m/s^2 (G)	
6	Supply Voltage	Vcc	14	V	2
7	Supply Current	Icc	2.0	A	
8	Power Dissipation	P_D	1.92	W	Ta=70°C

Operating Supply Voltage Range	Vcc	3.5V ~ 13.5V

Note 1) The temperature of all items shall be Ta=25°C except storage temperature, operating ambient temperature.

Note 2) At no signal input.

APPROVED
EXTERNAL ISSUE

B Electrical Characteristics

(Unless otherwise specified, the ambient temperature is 25°C ± 2°C, Vcc=8.0V, frequency=1kHz and RL=8Ω.)

No	Item	Symbol	Test Circuit	Conditions	Limits min	Limits typ	Limits max	Unit	Note
1	Quiescent Circuit Current	I_{CQ}	1	Vin=0V, Vol=0V	-	45	100	mA	
2	Standby Current	I_{STB}	1	Vin=0V, Vol=0V	-	1	10	µA	
3	Output Noise Voltage	V_{NO}	1	Rg =10kΩ, Vol=0V	-	0.10	0.4	mVrms	1
4	Voltage Gain	G_V	1	P_O = 0.5W, Vol=1.25V	31	33	35	dB	
5	Total Harmonic Distortion	THD	1	P_O = 0.5W, Vol=1.25V	-	0.10	0.5	%	
6	Maximum Power Output	P_O	1	THD=10%, Vol=1.25V	2.4	3.0	-	W	
7	Ripple Rejection Ratio	RR	1	Rg =10kΩ, Vol=0V Vr=0.5Vrms, fr = 120Hz	30	50	-	dB	1
8	Output Offset Voltage	Voff	1	Rg =10kΩ, Vol=0V	-250	0	250	mV	
9	Volume Attenuation Ratio	Att	1	P_O = 0.5W, Vol=0V	70	85	-	dB	1
10	Channel Balance 1	CB 1	1	P_O = 0.5W, Vol=1.25V	-1	0	1	dB	
11	Channel Balance 2	CB 2	1	P_O = 0.5W, Vol=0.6V	-3	0	3	dB	
12	Middle Voltage Gain	G_{Vm}	1	P_O = 0.5W, Vol=0.6V	20.5	23.5	26.5	dB	
13	Channel Crosstalk	CT	1	P_O = 0.5W, Vol=1.25V	40	55	-	dB	

Note 1) For this measurement, use the BPF = 15Hz ~ 30kHz (12dB/OCT).

APPROVED
EXTERNAL ISSUE

B	Electrical Characteristics	(Unless otherwise specified, the ambient temperature is 25°C ± 2°C, Vcc=8.0V, frequency=1kHz and RL=8Ω.)							
No	Item	Symbol	Test Circuit	Conditions	Limits			Unit	Note
					min	typ	max		
1	Standby pin current	I_{STB2}	1	Vin=0V, V_{STB}=3V	-	-	25	µA	
2	Volume pin current	I_{VOL}	1	Vin=0V, Vol=0V	-12	-	-	µA	

Note) The above characteristics are reference values determined for IC design, but not guaranteed values for shipping inspection. If problems were to occur, counter measures will be sincerely discussed.

APPROVED
EXTERNAL ISSUE

(Description of test circuit and test method)

Test Circuit 1

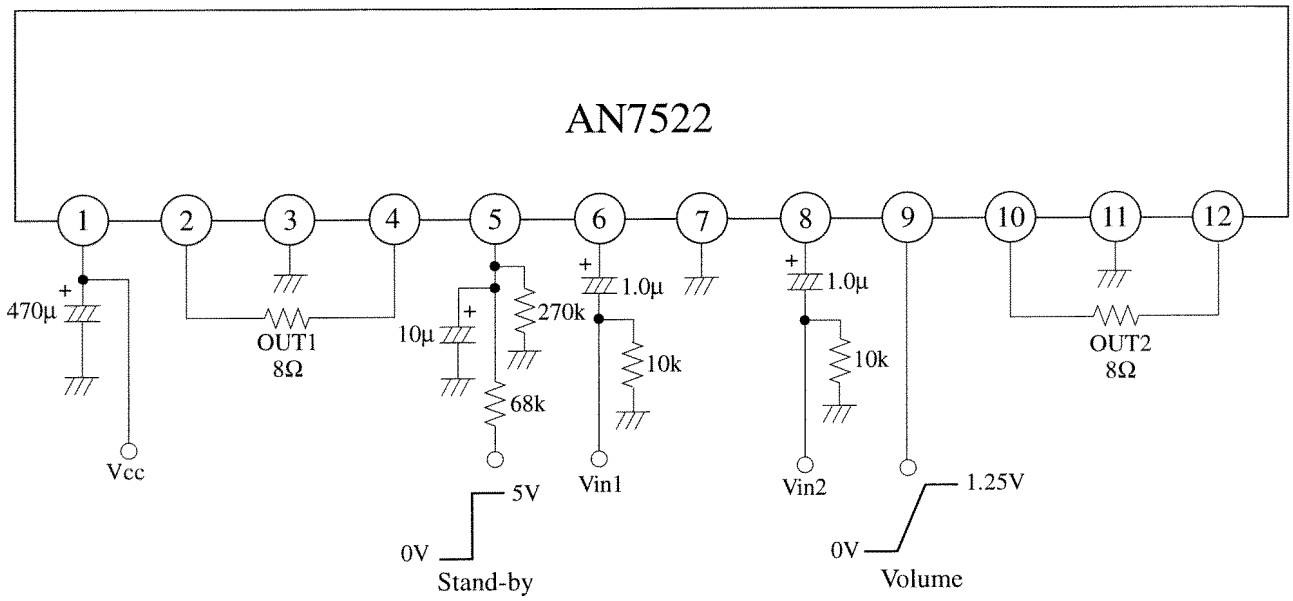

Note) If the standby pin is open or 0V, the IC is on standby state.
The IC is in the state of volume minimum if the Volume pin is ground.
The IC is in the state of volume maximum if the Volume pin is open.

APPROVED
EXTERNAL ISSUE

Circuit Function Block Diagram

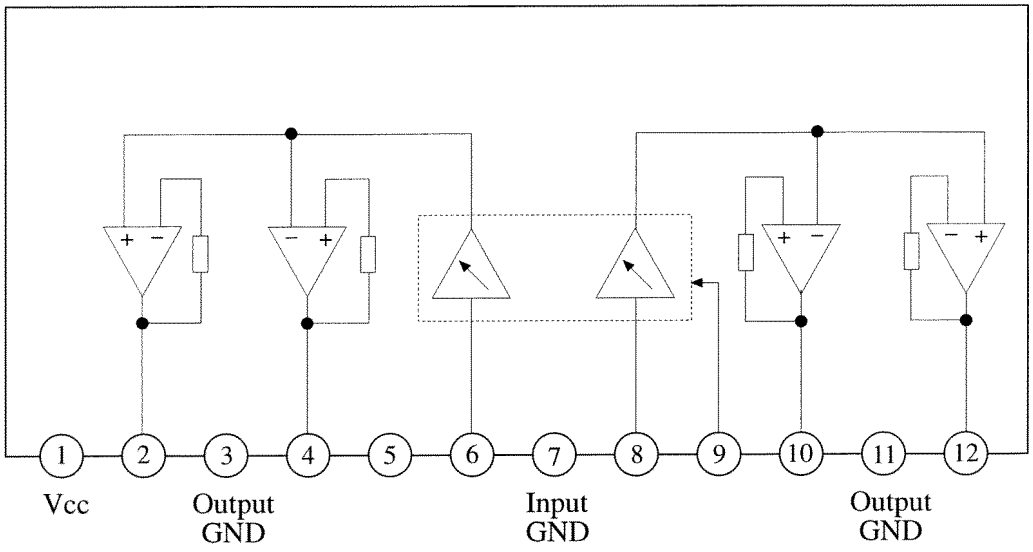

Pin Descriptions

Pin No.	Description	Pin No.	Description
1	Vcc	7	GND (Input)
2	Ch. 1 Output (+)	8	Ch.2 Input
3	GND (Ch. 1 Output)	9	Volume
4	Ch.1 Output (-)	10	Ch.2 Output (-)
5	Standby	11	GND (Ch.2 Output)
6	Ch.1 Input	12	Ch.2 Output (+)

APPROVED
EXTERNAL ISSUE

Package Name	FP12S

Unit : mm

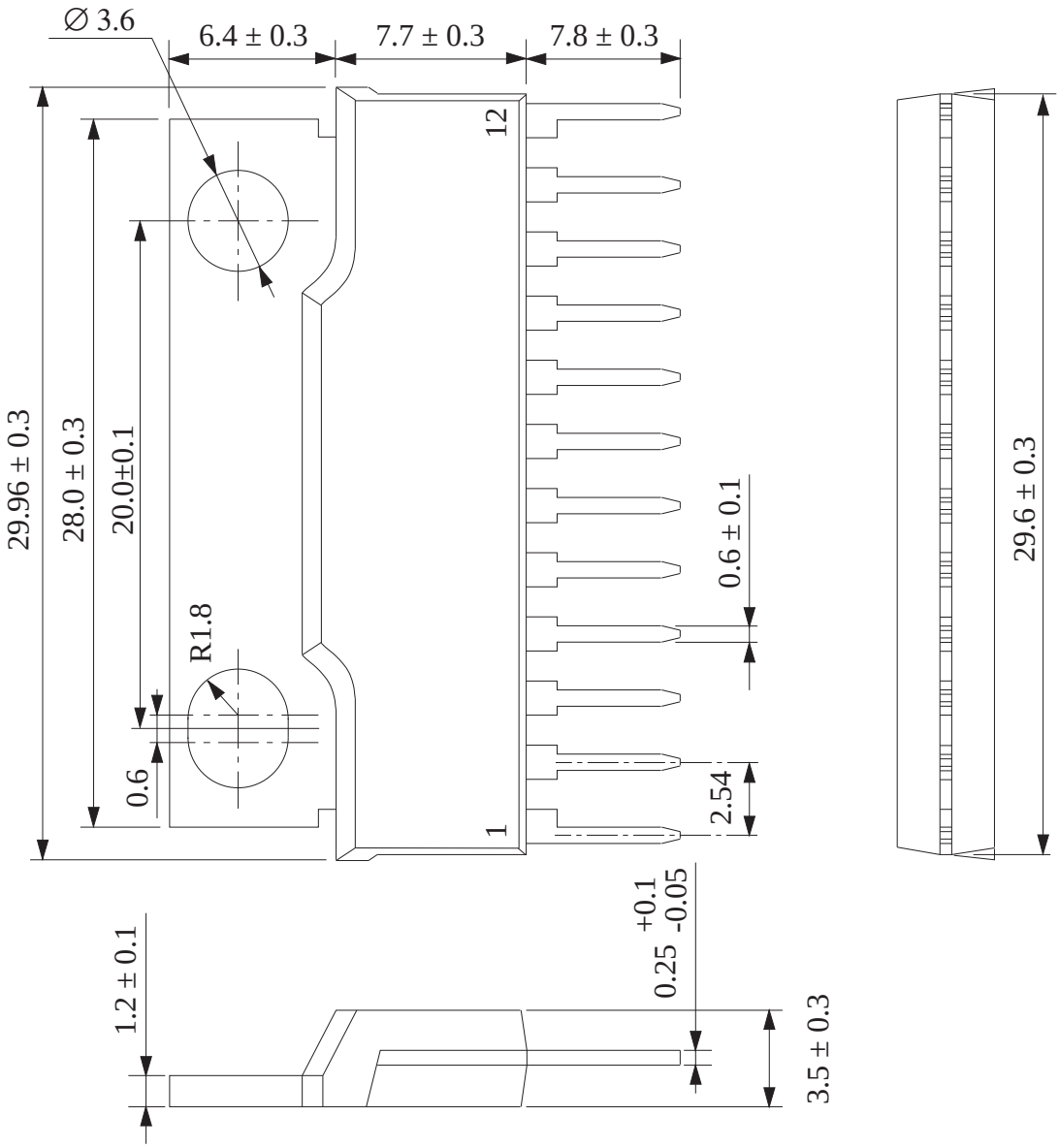

*3

Eff. Date	Eff. Date	Eff. Date	Eff. Date
26-MAY-99	-	-	19-JAN-05

APPROVED
EXTERNAL ISSUE

(Structure Description)

Chip surface passivation	SiN, [PSG,] Others ( )		(1)
Lead frame material	Fe group, [Cu group,] Others ( )		(2), (6)
Inner lead surface process	[Ag plating,] Au plating, Others ( )		(2)
*4 Outer lead surface process	General Customer: Solder Plating (98Sn-2Bi) SC Buyback: Solder Dip (95.5Sn-2Ag-2Bi-0.5Cu)		(6)
Chip mounting method	Ag paste, Au-Si alloy, [Solder (95.5Pb-2.5Ag-2Sn)**,]		(3)
Wire bonding method	[Thermalsonic bonding,] Others ( )		(4)
Wire material	[Au,] Diameter 38 µm Others ( )		(4)
Mold material	[Epoxy,] Others ( )		(5)
Molding method	[Transfer mold,] Multiplunger mold, Others ( )		(5)
Fin material	[Cu group,] Others ( )		(7)

** Under RoHS exemption clause, Lead (Pb) in high melting temperature type solder (ie. tin-lead solder alloy containing more than 85% of lead), is exempted until 2010.

Package FP12S

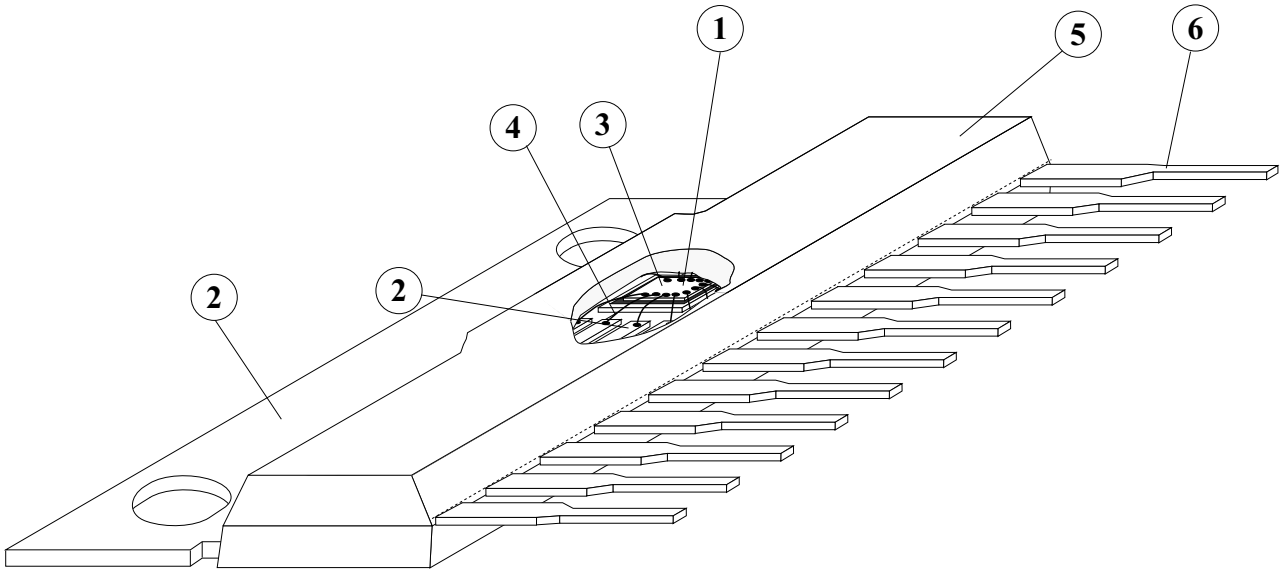

*4

APPROVED EXTERNAL ISSUE

$$\left(\begin{array}{c} R_{th(j-c)} = 2^\circ C/W \\ R_{th(j-a)} = 41.7^\circ C/W \end{array}\right)$$

FP-12S Package Power Dissipation

P_D - Ta

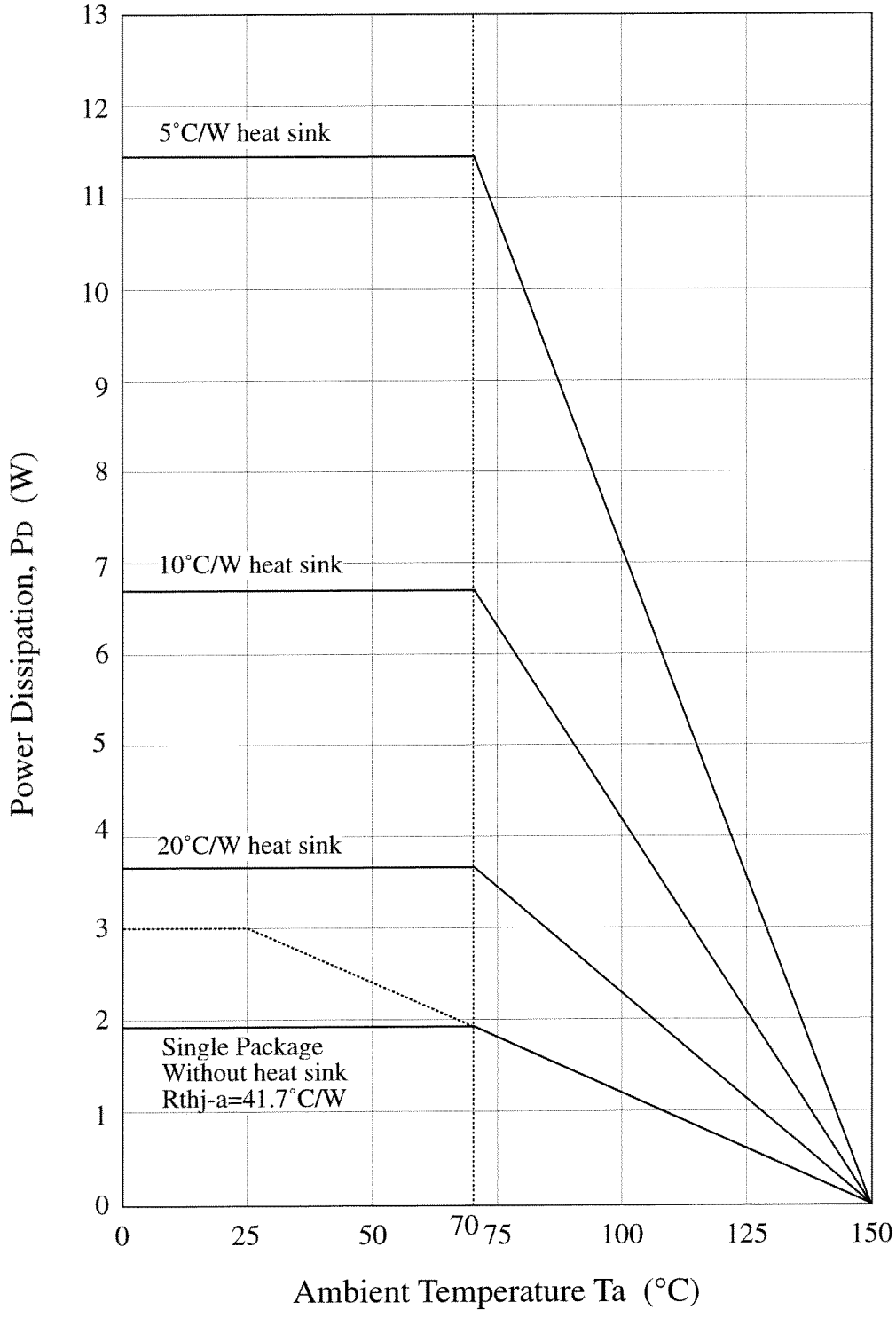

APPROVED
EXTERNAL ISSUE

(Precautions for use)

1) Make sure that the IC is free of any pin short-circuiting, ground fault, and load short-circuiting.

2) Ground the radiation fin so that there will be no difference in electric potential between the radiation fin and ground.

3) The thermal protection circuit operates at a Tj of approximately 150°C. The thermal protection circuit is reset automatically when the temperature drops.

4) Make sure that the heat radiation design is effective enough if the Vcc is comparatively high or the IC operates high output power.

5) Connect only ground pin for signal sources to the signal GND pin of the amplifier on the previous stage.

6) The electric surge voltage for this IC is low, therefore be extra careful when using the following pins (at 200pF):
Pin 5 = +140V, Pin 6 = +140V, Pin 9 = +130V, Pin 8 = +150V